Top View

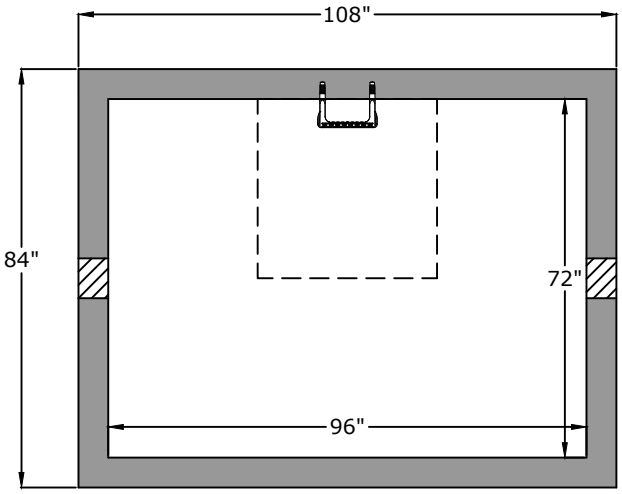

Notes

Top - 11,600 lb
Bottom - 13,400 lb

Side View

36" x 36" Aluminum Hatch

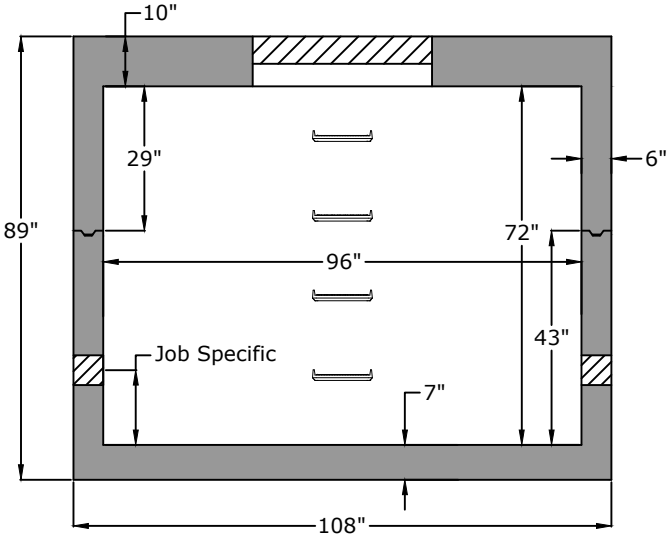

Joint Detail

Positive Lock Male/Female Keyway
+- 0.005" tolerance

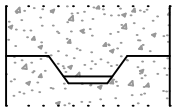

Approved for Production

Project: _____ **Date:** _____

Quantity: _____ **By:** _____

BARGER PRECAST

C.R. Barger & Sons, Inc.
P.O. Box 370 - Kingston TN 37763
Phone 888.882.5860 - BargerAndSons.com

Specifications

Concrete: 5,000 psi minimum strength (28 day)
Reinforcing: Primary reinforcement will be a #3 rebar (Grade 60) rebar.
Pipe Penetrations: The inlet and outlet are fitted with solid seals or a grout connection. All pipe penetrations are placed according to job requirements.
Pipe Stands: Pipe stands can be provided to support assembly.
Sealant: Sealant used will meet or exceed ASTM C990.
Steps: Aligned under hatch unless specified.
General: Meter vaults are not water tight structures.

96" x 72" x 72" HS20 Vault

Date:	Last updated:	Drawn by:
11.022021	10.182023	Eric Barger